Beyond Slopping the Pigs: Biological Detoxification of Certain Hazardous Wastes

Rachel Freifelder

Introduction

Currently, the most common fate of a hazardous waste is "disposal," more correctly called "permanent storage," in a landfill or some structure above the surface. However, landfilling will soon be banned due to the risk of leakage. Even if no storage facility ever leaks, storage will only postpone dealing with the waste, as we will eventually use up the limited number of places in which aesthetic, environmental, seismic and other factors would make a hazardous waste landfill acceptable.

Rather than store these wastes, it would be preferable to render them less toxic or, even better, economically useful. This can be done via either biological or physicochemical processes. Chemical treatment systems have been developed which require a constant supply of reagents, as well as human or mechanical energy to add these reagents to the waste. In a biological process, wastes would be added to the growth medium of various organisms that thrive on chemical energy from the decomposition of complex organics, or incorporate heavy metals into essential pigments. From a theoretical standpoint, biological treatment has some advantages over the chemical processes. First, living organisms direct their own reactions, given acceptable growth conditions, and may thus save human work and other energy. In addition, any necessary nutrients that are not already in the waste stream, and must be added, are still often cheaper than reagents for chemical treatment; the nutritional supplement may be as simple as a nonhazardous solid waste like sewage sludge.

The concept of biological waste treatment is not new; it began with the first herders who fed rotten vegetables to their pigs, and today exists in forms as technologically advanced as the bacterial cultures that extract organic matter from municipal wastewater. Research has proliferated on biological species that may provide solutions to waste disposal problems. Because organisms are fairly specific as to what they will and will not eat (even pigs, which can only digest proteins, fats and carbohydrates), there is a vast array of possible detoxifying cultures, each for a different waste.

In this report, I will examine the possibilities of hazardous waste biodegradation as a mode of disposal for hazardous waste. To reduce the volume of data presented to a manageable level, I have confined the focus of my report to the detoxification of toxic metals and chlorinated aromatics. Even this limited scope entails the examination of a large number of chemicals and the corresponding organisms that degrade them. Based on extensive review of previous and current research in the area, I designed a treatment system for the Entomology Department of UC Berkeley, with the intent of demonstrating what a hazardous waste biotreatment facility might be like, and how the data of many biologists could be applied to a specific waste stream. Where a lack of available data prevents accurate design of some aspect of the system, I recommend that further research pursue the necessary information.

Past Studies and Sources of Background Knowledge

Biological Abstracts and *Pollution Abstracts* both contain summaries of papers published in a large number of scientific journals and magazines. From these, I discovered that a large volume of research has already been done on biological removal and destruction of persistent pollutants, and that this research dates to the early 1970s. The fact that industry still considers biological hazardous waste treatment to be a new idea (see Bluestone, 1986) suggests that it has unexploited potential, and that hazardous waste generators are simply unaware of this body of knowledge.

Chang and Kirk (1983) found that a natural enzyme system of a single species, *Phanerochaete chrysosporium*, could be used to remove mild organic pollutants from organic wastewater. In later research, Kirk tested biodegradation systems using this fungus and determined which type of bioreactors were most efficient (Bumpus *et al.*, 1985).

J. Frankenburger, professor of soil science at UC Riverside, is studying biological removal of excess selenium from Kesterson Wildlife Refuge. Selenium is a metal, but is not considered toxic because it is also an essential nutrient that occurs naturally in soil. W. J. Oswald, professor of Sanitary Engineering at UC Berkeley, has also been studying solubilization of selenium by biological species, but more importantly, his lab is soon to join

the small number studying biodegradation of chlorinated aromatics. His confidence in this move gave me the first hint that hazardous waste biotreatment may actually be possible.

Grady and Lim (1980) describe in detail standard techniques for biodegrading nonhazardous wastes such as sewage. I used these techniques as models for the design of a hazardous waste biotreatment system. Laughlin (1983) describes a chemical oxidation process for hazardous waste, which readers may find interesting for the purpose of comparison with biological oxidation. Smith and Moore (1984) borrowed bioreactor types from the established treatment methods for nonhazardous wastes and tested them for a hazardous waste treatment system. Their cultures became inactive and died of poisoning after at best 100 days, but worked very effectively at first. It seemed that an effective system would require more resistant microorganisms.

Background

Biological treatment of solid and liquid waste has been widely practiced for some years now. In the mid-1970s, genetically-modified bacteria were developed that degrade petroleum fractions. Many oil companies now use these "oil bugs" to clean up the final vestiges of spills.

A few chemical treatment systems currently operate to detoxify streams of what EPA calls "priority" hazardous wastes, such as pesticides, PCBs, and toxic metals (e.g. Laughlin, 1983). In addition, a number of companies are in the business of developing site-specific arrays of microflora for contaminated sites (Bluestone, 1986). Polybac (Allentown, PA), Detox Industries (Houston, TX), and Biotechnica (Cardiff, Wales) all collect samples from the site in question and culture the native microbes, then select for the hardiest, fastest-growing strains by culturing them on a more concentrated mix of the pollutants. The producer of this kind of treatment regimen may not know or care what species are cleaning up the waste. They simply use what happens to be there, and assume that among the native populations is a species that not only tolerates the toxin, but degrades it.

However, from these site-specific projects, bacterial species can sometimes be isolated that degrade particular wastes, and hence could be useful for treating a point-source waste

stream. For example, Spain and Nishino (1987) isolated a bacterium from mixed culture that degrades paradichlorobenzene to a mild organic acid.

Many organisms have been discovered or bred that degrade a specific hazardous material or range of materials, but no treatment process as yet has involved deliberately inoculating a site or waste stream with one of these identified species. The few existing systems use mixed cultures of unidentified microbes like those described above. (The use of "oil bugs" does not contradict this statement because, according to EPA classifications, petroleum fractions are not hazardous waste). Smith and Moore (1984) developed an experimental model for a detoxifying culture by a selection process similar to that used by site cleanup companies: they exposed a mixed culture of bacteria and other micro-organisms to toxic organic chemicals. Their microbes degraded chlorine-free organic wastes, but after prolonged exposure to wastes containing pesticides, copper or chromium, were able to degrade less than 50 percent of the waste.

Most of the organisms currently under study grow poorly or die in the presence of some hazardous wastes other than those they degrade. Some of those that take up heavy metals have shown toxic effects when the concentrations of the metals exceed certain levels. Organisms that degrade chlorinated phenols may be highly specific with regard to number and position of chlorine atoms: Apajalahti and Salkinojasalonen (1986) found that one bacterium rapidly degrades 2,4,6-trichlorophenol but dies in the presence of 3,4,5-trichlorophenol, which differ only in the position of two chlorine atoms (Figure 1). All of the organisms share the property that they will only grow in aqueous culture.

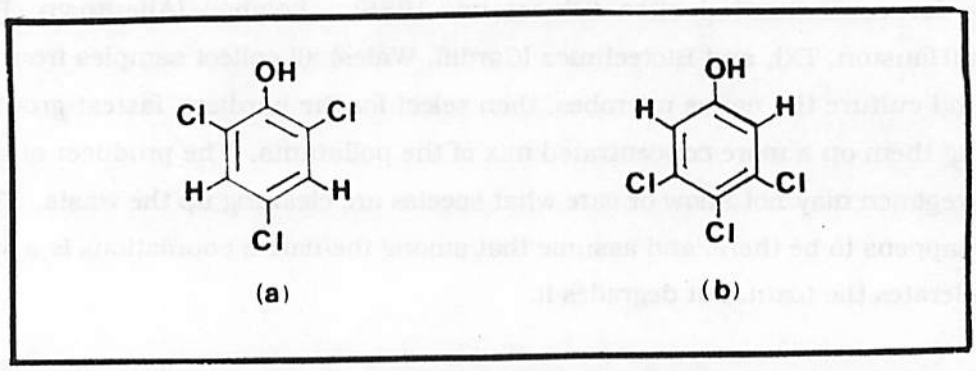

Figure 1. *Rhodococcus chlorophenolicus* easily metabolizes 2,4,6-trichlorophenol (a), but dies when exposed to 3,4,5-trichlorophenol (b). The two compounds differ only in the position of two chlorine atoms.

Methodology

I focus on chlorinated aromatics and heavy metals because they are two types of extremely hazardous materials for which no treatment protocol, of either a biological or a chemical nature, seems to exist. Acids and bases can be neutralized, and biodegradation is already common practice for many of the less toxic organic compounds, both for nonhazardous compounds like petroleum fractions and for low-level hazardous wastes. In industry, oil bugs are old news. However, highly toxic chlorinated aromatics such as PCBs and pesticides have only been biodegraded in a controlled experimental context, and in a few site cleanups. Most waste producers, and certainly the general public, are unaware of any potential in this area.

Journal literature in the fields of microbiology and public health provided a list of species, primarily microorganisms, each of which is able to detoxify a particular waste or class of wastes. The most important of these are presented in two tables, indexed by waste.

To design a hazardous waste biotreatment system, I researched the bioreactors and associated procedures used for treating nonhazardous solid wastes. Issues specifically examined include the relationship of waste volume and concentration to reaction rate and space requirements, and which types of reactor are considered the most efficient by those knowledgeable about sanitary engineering.

The biotreatment system I propose incorporates various aspects of the nonhazardous waste treatment methods studied. The principle is a series of treatment tanks, each containing a different culture of one or several biological species that detoxify particular chemicals. My system uses only two cultures. The first removes pesticides and is divided into three compartments in series to improve efficiency. The second removes metals, and there is a precipitator between the cultures to remove chloride ion. The tanks are ordered so that no degrading species will be killed or inhibited by a waste still in the mixture.

I designed the system as on-site treatment for the Entomology Department of U.C. Berkeley. I chose this department because it generates a large volume of pesticides, which are mostly chlorinated aromatic compounds. Data for Entomology's waste stream come from compilations by the campus Office of Environmental Health and Safety (UCB EH & S, 1987)

The report then examines the feasibility and usefulness of biological hazardous waste treatment in general for UC Berkeley, and discusses in what type of setting it might be most useful. Finally, I recommend directions for further research.

Data

Two general classes of hazardous wastes are dealt with in this paper: chlorinated aromatics and toxic metals. Chlorinated aromatics are organic compounds composed of rings of carbon atoms with chlorine atoms attached. They are highly reactive and therefore highly toxic or carcinogenic. Polychlorinated biphenyls (PCBs) function as coolants and most other chlorinated aromatics are used as biocides: pentachlorophenol (PCP) is a fungicide and wood preservative; 2,4,5-trichlorophenol (Agent Orange) is an herbicide; paradichlorobenzene is the active ingredient in mothballs; lindane and other dioxins are insecticides. The metals of greatest concern are copper (Cu), chromium (Cr), mercury (Hg), cadmium (Cd) and lead (Pb). Heavy metal poisoning is usually an effect of long-term exposure (either constant or occasional), most commonly to oxides or ions of the metals.

Toxicity and detoxification: Chlorinated aromatics derive their toxicity from their structure and from reactive carbon-to-chlorine bonds. The aromatic ring structure, upon which they are based, is very stable and thus very difficult to break down. An organism that detoxifies them removes the chlorine atoms and breaks down the structure to something less toxic. Chlorine ions in aqueous solution usually form a fairly safe salt such as sodium chloride (table salt). The organism breaks down the carbon skeleton enzymatically to obtain the energy of its chemical bonds--just as the pig derives energy from breaking down the carbohydrates and fats in table scraps.

In the case of metals, it is usually an individual reactive ion or atom that is dangerous. Therefore a detoxifier cannot break down the toxin, but must either absorb it or incorporate it into a nontoxic molecule. *Chelation* is the incorporation of a metal into a water-soluble organic compound. Most chelates are pigments (e.g. for photosynthesis or transport) and many are nontoxic. Common examples are chlorophyll, a chelate of magnesium (Mg), and hemoglobin, a chelate of iron (Fe). Many "detoxifiers" simply tolerate the metal--they store it in their cytoplasm or incorporate it into their cell walls. As the cells proliferate, the quantity per cell stays low.

Class of chemical	Organism (source no.)	Product
chlorinated phenols		
pentachlorophenol	*Pseudomonas aeruginosa* (1)	$CO_2 + Cl^-$
	Flavobacterium sp. (2)	
	Rhodococcus chlorophenolicus (3)	
	Phanerochaete chrysosporium (4)	
other	*Flavobacterium sp.* (5)	$CO_2 + Cl^-$
	R. chlorophenolicus (3)	
	Pseudomonas cepacia (6)	
	P. chrysosporium (4)	
PCBs		
Aroclors	*Alcaligenes eutrophus* (7)	hydrocarbons,
	$CO_2 + Cl^-$; varies	
Kaneclors	*Achromobacter* sp. (8)	with type of PCB
	Acinetobacter sp. (6)	
	P. chrysosporium (9)	
Dioxins		
lindane	*P. chrysosporium* (9)	$CO_2 + Cl^-$
chlordane		
Other chloroaromatics		
paradichlorobenzene	*Pseudomonas sp.* (10)	$CO_2 + Cl^-$
n-chlorobenzoates	*Alcaligenes denitrificans* (1)	
	Arthrobacter sp. (1)	
	P. chrysosporium (9)	

Table 1: Flora that degrade chlorinated aromatic compounds, and products of degradation.

Sources:
1. Bluestone, 1986 2. Steiert and Crawford, 1986 3. Apajalaht and Salkinojasalonen, 1986 4. Aust, 1988 5. Steiert and Crawford, 1987 6. Chakrabarty, 1987 7. Bedard et al, 1987 8. Ahmed & Focht, 1973 9. Bumpus et al, 1985 10. Spain & Nishimo, 1987

Recent and current research shows many species to be useful for detoxification of wastes containing chlorinated aromatics or metals (summary in Tables 1 and 2). A great variety of microflora exist each of which break down a few of the equally great variety of chlorohydrocarbons (Table 1). Polychlorinated biphenyls are degraded by several bacterial

species and by the fungus *Phanerochaete chrysosporium* (Bumpus *et al.*, 1985). There are over eighty types of PCBs (Bedard *et al.*, 1987) and each species degrades a slightly different spectrum. However, the spectra degraded by *Phanerochaete*, *Acinetobacter* and *Achromobacter* are fairly similar, while *Alcaligenes denitrificans* degrades a significantly different spectrum. The degradation products can be either oxidized (usually to carbon dioxide [CO_2]) or reduced (to smaller hydrocarbons).

Chlorinated phenols, on the other hand, are almost universally oxidized to CO_2, chloride ion (Cl^-) and water. *Pseudomonas cepacia* degrades a wider variety and a more concentrated mix of chlorinated toxins than do any other bacteria (Chakrabarty, 1987, pers. comm.).

Phanerochaete chrysosporium has so far degraded every organic compound it is given, including PCBs, the dioxins lindane and chlordane, and a compound considered the strongest pesticide known, 2,3,7,8-tetrachlorodibenzo-p-dioxin (Bluestone, 1986). When its medium lacks nutrient nitrogen (nitrites or nitrates), sulfur, or carbohydrate, it secretes enzymes which in nature digest lignin, a structural component of wood. These same enzymes also digest most hydrocarbons, including chlorinated aromatics. *Phanerochaete* works best in nitrogen-deficient aqueous cultures supplied with glucose. Some pollutants are degraded very slowly, on the order of 10-percent disappearance in 30 days. The fastest degradation observed was that of lindane, which was 90-percent consumed in 30 days by a glucose-supplied culture (Bumpus et al, 1985). High levels of pentachlorophenol (PCP) were found to be toxic to *P. chrysosporium*, but PCP, too, was degraded when diluted to 500 ppm. A few extremely resistant organopollutants, such as hexachlorobenzene, have been virtually unaffected by the fungus (Aust, 1988, pers. comm.).

Organisms that clean up metals (Table 2) are both less specific and less common than those which digest chlorohydrocarbons. The bacterium *Klebsiella aerogenes* forms sulfides of mercury and lead, which are volatile but less toxic than the elemental metals; it also reduces cadmium ion to its elemental form, which is less toxic than the ion. No species was found that chemically altered a spectrum of metals, but several will accumulate most metals. The water hyacinth, *Eichornia crassipes*, tolerates acids and many organic compounds and removes copper, mercury, cobalt and lead from water with great effectiveness (Jamil, 1987; Nor, 1986). It accumulates the metals without chemically altering them, but it grows so fast that the mass of tissue is always enough to keep the

concentrations low and protect it from poisoning. A bacterium, *Pseudomonas fluorescens*, and *Penicillium* mold (Galun, 1987) also absorb the same range of metals. *Pseudomonas aeruginosa* (Premuzic, 1985) promotes the chelation of iron, but has little effect on other metals. No available data stated what substances injure any of these species, except that *Eichornia* is poisoned by pesticides and herbicides.

Metal(s)	Genus/species (source)	Fate of metal
Mercury (Hg) Lead (Pb)	*Klebsiella aerogenes* (1)	volatile sulfides formed
Cadmium (Cd)	*Klebsiella aerogenes* (1)	ion reduced to elemental form
Iron	*Pseudomonas aeruginosa* (2)	chelated
many metals	*Eichornia crassipes* (3) *Penicillium* sp. (4) *Pseudomonas fluorescens* (2)	accumulated

Table 2: Flora that remove toxic metals, and fate of removed metal

Sources:

1. Alking et al, 1985 2. Bluestone, 1986 3. Jamil, 1987 4. Galun and Siegel, 1987

Bioreactors: Many different reactors are used to biodegrade sewage. The most common designs are the activated sludge process and the rotating biological contactor. Activated sludge (Fig. 2) is so named because the tank appears to be filled with sewage sludge, but the "sludge" is actually mixed with microflora that are alive or "biologically active." The system consists of a stirred culture tank, a settling tank, and influent, effluent, and sludge recycle tubes. Waste enters the culture tank to be digested by the microorganisms there, then flows into the settler, where any of the cells that have flowed out with it settle out. The clarified water is decanted from the top, and the settled out cells return to the culture tank. For equivalent waste streams, activated sludge costs more than any other biotreatment process (Grady and Lim, 1980).

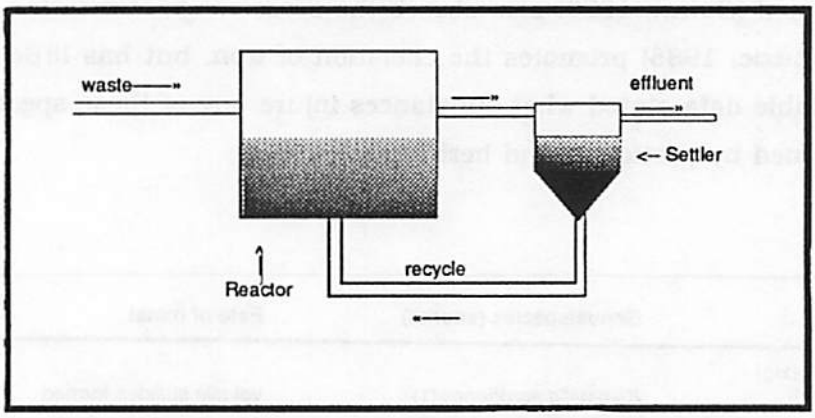

Figure 2. Activated sludge bioreactor. Waste enters the stirred reactor at upper left (stirring mechanism not shown), in which degradative organisms reside in suspension. Detoxified water flows to settler, where cells are removed and returned to culture. Clarified water leaves at right.

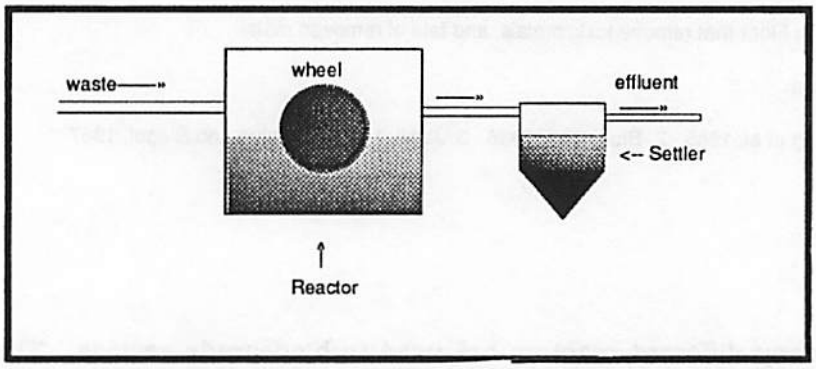

Figure 3. Rotating biological contactor. Detoxifying cells grow on surfaces of wheel, shown end-on. Waste is poured into water and cells are dragged through it by rotation of wheel. Cells that flow out of reactor are removed in settler, as with activated sludge, but not recycled. Clarified water exits at right.

The rotating biological contactor (RBC), Fig. 3, is similar to activated sludge except that the culture is not suspended in the medium, but grows on discs or rods attached to form a large, horizontal-axis wheel. This is about 40-percent submerged, so that its slow rotation constantly brings new cells into the medium and old ones out. Since the culture is intended to reside on the rotor rather than in suspension, cells decanted with the water are normally not recycled, but left in the settler. The RBC is popular because it costs about

one-fourth what other conventional processes do, and because it can better withstand a sudden influx of concentrated waste (a "shock load") than processes in which the cells are never removed from contact with the waste. Smith and Moore (1986) designed what they called an "activated RBC", in which settled cells *were* returned to the reactor. This method is more expensive to maintain than activated sludge, but also more efficient than any of the conventional systems. In the case of each reactor type, optimal concentrations and residence times vary with the species used and the waste being processed.

Discussion

Each biological waste treatment system clearly must be tailored to the particular waste stream, but some waste streams cannot be biologically treated at all. Most microorganisms that degrade hazardous waste are highly specific for a substrate; many, in fact, become inactive when exposed to organopollutants similar but not identical to the ones they degrade best. Therefore, most of the organisms studied would be most useful for a company disposing of large quantities of a few chemicals, preferably unmixed. The university's waste stream contains small quantities of many different substances. It would be hopeless to try to biodegrade the final mixture assembled by the Office of Environmental Health and Safety. The one exception to this ultraspecificity is the fungus *P. chrysosporium*. It has degraded virtually every organopollutant fed it; even those which are toxic to it, such as PCP, can be degraded if sufficiently diluted.

Another limitation of most of the microbes studied is that they can only metabolize substances in aqueous solution, and many large organic compounds are difficult to dissolve in water. *P. chrysosporium* works *best* in aqueous solution, but seems to degrade fairly well compounds suspended in water or even in soil. Finally, many of the organisms require a high concentration of a given pollutant to induce synthesis of the enzymes needed to break it down. Again, *P. chrysosporium* is the exception (Bumpus and Aust, 1986) as it produces its pollutant- degrading enzymes in response to nitrogen starvation. If any organism has a chance of effectively detoxifying a mixed organic waste, it is this fungus.

In fact, *P. chrysosporium*' s effectiveness will soon be tested outside the laboratory. One of the researchers who discovered its propensity for degrading persistent organopollutants, Dr. Stephen Aust, has continued to study it and feels his work is ready to move from theory to application. He is now negotiating patenting of a treatment process with IT Corp. Aust's

research is now concerned with upscaling, i.e. determining optimum growth conditions and design for a large scale culture (Aust, 1988, pers. comm.).

Proposed Detoxification System for Entomology Department: What follows is an example of a detoxification system employing *P. chrysosporium*, *Eichornia crassipes*, and *Penicillium*. It is designed on a small scale, to serve the UC Berkeley Department of Entomology. In 1986, this department produced 792.5 pounds of mixed waste pesticides, plus 350 pounds of pesticide-contaminated soil, out of its total waste stream of 2008 lbs. The waste classified as "pesticides" may contain other substances, such as toxic metals, in trace quantities. Even at the departmental level, no system could be devised from my data that could reasonably handle the entire waste stream. The mixture is still too diverse. Therefore my system tackles only a portion of Entomology's waste.

The first requirement of the system is that wastes be kept separated, especially because some of the non-pesticide refuse contains fixed nitrogen, and *P. chrysosporium* must be kept deficient in this nutrient. However, since quantities of various substances were reported as distinct portions of the waste stream, it is assumed that they must have been separate at some point and it would not be complicated to keep them so. For the system proposed, it is also important to keep the soil separate from the pure waste, as they will be treated separately.

The pure compounds will be treated in a series of three sealed culture tanks (Fig. 4a), with the fungus growing on porous plastic discs and rods (closeup of top tank and 2 wheels shown in Fig. 4b). I chose the rotating biological contactor design over other reactor types because in the few labs that actually tested a hazardous waste biodegradation system, the RBC design was found to be the most effective (Aust, 1986; Smith and Moore, 1986).

Although *P. chrysosporium*'s metabolism requires air, the tanks must be sealed to trap the evolved CO_2. Biochemical oxidation shares with thermal oxidation the problem of producing much CO_2 which, if released into the atmosphere, will accumulate to contribute to acid rain and the "greenhouse effect." On the scale of a single system, the impact may not seem significant, but were such systems widely used, the amount of CO_2 would be large. Therefore, a small fan directs the flow of gases through each tank, bringing in fresh air and blowing low-oxygen, high-CO_2 spent air out and into a collecting tank. When the tank is full, the entry valve is sealed and the inner lining removed, like changing a vacuum cleaner bag.

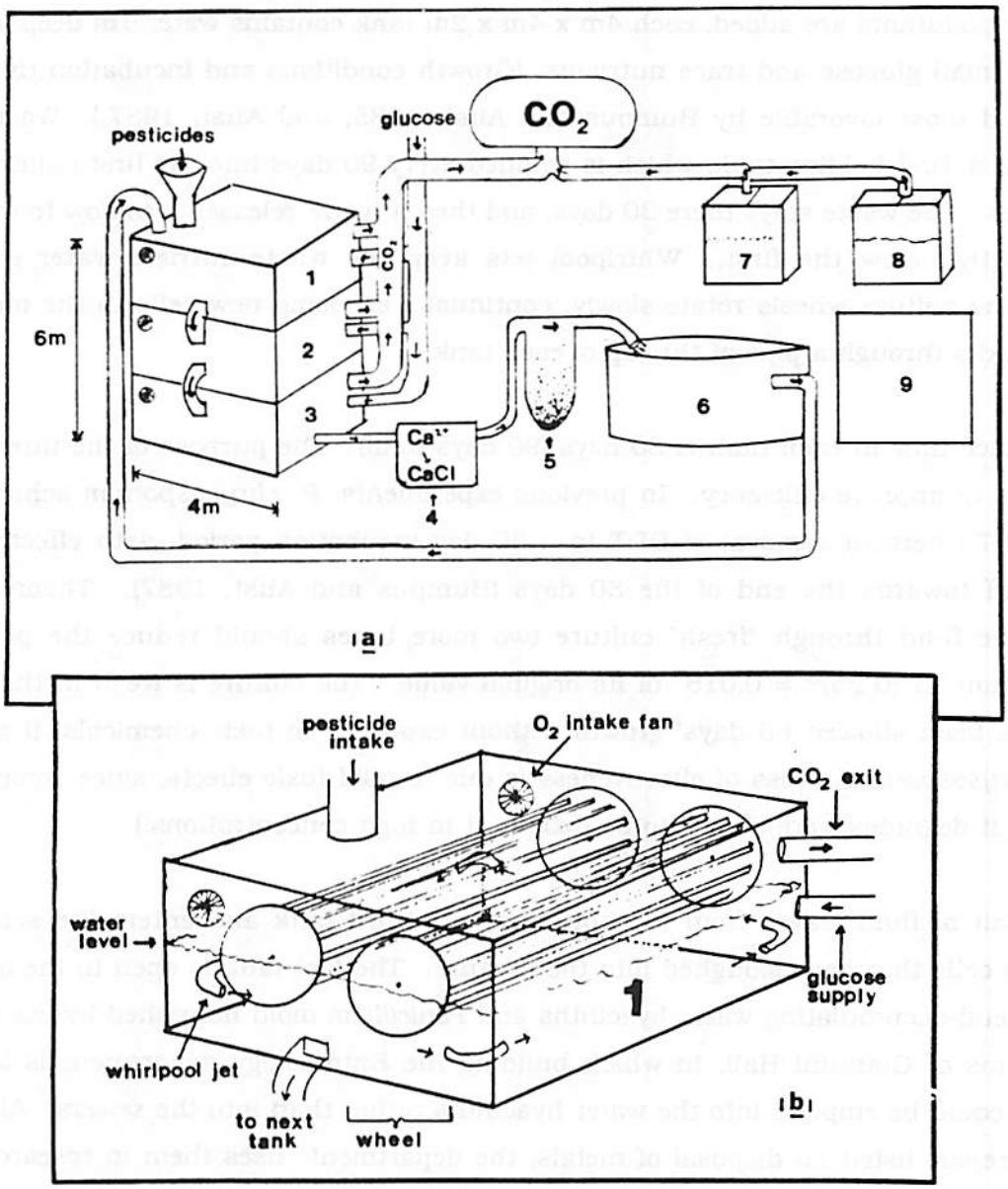

Figure 4. Proposed pesticide oxidation system for UCB Department of Entomology. **(a)** System flow: Liquid waste is fed into the culture tank (1), and exits bottom tank (3) 90 days later. Chloride ion is precipitated as CaCl in precipitator (4). Dislodged cells are removed in settler (5) and filtrate goes into tank of water hyacinths and *Penicillium* mold (6), where metal ions are extracted. Water is recycled. Contaminated soil is detoxified in bins (7 and 8). When both bins have been filled and sealed, excess soil resides in holding bin (9) until a culture bin is cleared. **(b)** Top tank of reactor. For simplicity, mechanism that turns wheels is not shown. Fungus culture resides on rods, where it is less subject to shearing forces than on discs. Whirlpool jets in corners mix water. One-way intake fans supply oxygen, and CO_2 exits to collecting pipes. Each tank is supplied with 50 mM glucose solution.

The culture is first established on wood and then transferred to the plastic wheels. Before any pollutants are added, each 4m x 4m x 2m tank contains water 1m deep with 50 millimolar (mM) glucose and trace nutrients. (Growth conditions and incubation times are those found most favorable by Bumpus and Aust, 1985, and Aust, 1987.) Wastes are collected in a $1m^3$ holding tank, which is emptied every 90 days into the first culture tank of the series. The waste stays there 30 days, and then a valve releases it to flow to the next tank, directly below the first. Whirlpool jets keep the waste-nutrient-water mixture agitated. The culture wheels rotate slowly, continually exposing new cells to the medium. Spent air exits through a pipe at the top of each tank.

Residence time in each tank is 30 days (90 days total). The purpose of the three tanks in series is to improve efficiency. In previous experiments, *P. chrysosporium* achieved an average of 75 percent removal of DDT in a 30 day incubation period, with effectiveness tapering off towards the end of the 30 days (Bumpus and Aust, 1987). Theoretically, running the fluid through "fresh" culture two more times should reduce the pollutant concentration to $(0.25)^3 = 0.015$ of its original value. The culture is fresh in the sense that it has been allowed 60 days' growth without exposure to toxic chemicals. (I assume that *P. chrysosporium*' s loss of effectiveness is due to mild toxic effects, since some of the pollutants it degrades were shown to be toxic to it in high concentrations.)

The unit of fluid leaves from the bottom of the third tank and enters the settler, to remove any cells that have sloughed into the mixture. The last tank is open to the air, and contains metal-accumulating water hyacinths and *Penicillium* mold nourished by waste from the restrooms of Giannini Hall, in which building the Entomology department is located. This waste could be emptied into the water hyacinths rather than into the sewers. Although the EH&S report listed no disposal of metals, the department uses them in research, and the nonspecific pesticide mix is likely to be metal-contaminated. When water and tissue samples indicate that the plants are collecting metal ions less effectively, they are harvested and pulverized, and the ions extracted with EDTA (a solvent with a high affinity for most metals; many other extraction methods can be found in standard chemistry and biochemistry texts). The final result is a lump of mixed metal oxides and much dead plant matter. The effluent water is probably not pure enough to drink, but can be recirculated through the culture tanks to dilute the next batch of waste.

Contaminated soil is treated similarly to, but more simply than, the undiluted wastes. As soil cannot flow or be stirred, it is detoxified in batches. The "system" here consists of one bin for storage and two smaller bins for treatment. Initially, contaminated soil is dumped into a small bin and inoculated with the culture. When half full, the bin is sealed (again, to trap CO_2, which is piped to the same collector as that from the water reactor) and opened 30 days later. Several samples are taken from various points in the bin, and if they all meet EPA standards, the soil can be reused. If it is contaminated with metals, it goes into the hyacinth pond, to be dredged out 30 days later, dried, and tested again. If it passes, the culture bin is refilled from the holding bin and the process repeats.

The sizes of the tanks and bins are based on the experimentally determined optima for incubation time and concentration, and on the reported waste stream. The pollutant concentration varied with each experiment and each chemical, but PCP provided a limiting case. It was detoxified when diluted to 500 ppm, but poisoned the fungus at higher concentrations (Aust, 1988, pers. comm.). Therefore the system dilutes all chemicals to 500 ppm so that the culture will be able to handle all of them. With a residence time of 30 days in each tank, the tank must hold

$$792 \text{ lbs.} \times (^1/_{12}) \text{ year} \times 500 \text{ ppm} \times 1 \text{ m}^3/2200 \text{ lbs} = 15 \text{ m}^3 \text{ water}$$

As the RBC wheel is normally 40-percent submerged (Grady and Lim, 1980), the tank must have a volume of just over 30 m^3. Dimensions of 4m x 4m (base) and 2m height are convenient as the tanks are stacked in series. The pure-waste unit of the system is thus 6m tall with a 4m x 4m base.

The precipitator and settler each hold the contents of one tank, or 16 m^3 of solution. The best shape for these is vertical, so each one can be 4m to 5m tall, with a cross sectional area of 4 m^2 (the settler will be slightly taller due to its pointed bottom). The tank in which metals are removed must be large enough simply to contain the plant matter. A vessel 3m deep, holding 45 m^3 (i.e., the volume of all three culture tanks), should accomodate the growth of the water hyacinths.

The size of the soil bins, derived similarly to that of the tanks, is based on a 30-day fraction of the 350 lbs of waste generated in a year, or 29 lbs (13 kg). The average density of soil is slightly more than that of water, so this mass will fit in a bin 2m tall with a base of

9 m^3. There are two such bins plus the holding bin. If arranged efficiently, the entire system could occupy an area 8m x 10m, with a maximum height of 6m. It would thus cover the same ground area as eight traditional dumpsters, and at the highest point extend up one story of Giannini Hall.

Because I assume that the ideal concentrations for all organopollutants are the same as those experimentally determined for DDT and PCP, and because this and other parameters may change with scaling-up from the test tube, the size calculated may be vastly inaccurate. However, it is useful as an order of magnitude. We know that the system will not fit in a fish tank, but neither will it occupy a whole building. It occupies about as much space as several dumpsters. Already, each UC building is ringed by loading docks, a dumpster or two, external heating and cooling apparati, and similar large structures. Therefore, the addition of the treatment system outside the building would not be unreasonably intrusive.

Applications of this system need not be limited to the Entomology Department. I chose this department because EH&S listed a defined quantity of pesticides, presumably kept separate from other wastes. This defined quantity allowed me to calculate, for the purpose of clarity, the size of a system for a university department.

Systems for specific wastes could also be applied in other parts of the university (or outside of the university) if these wastes, too, are kept separate. (This separation is essential, as this system only treats certain kinds of hazardous wastes: chlorinated aromatics and pesticides.) For example, the campus disposed of 4345 lbs. of PCBs last year. The liquid portion of this could probably be easily treated by a system using either *P. chrysosporium* or a mixed culture of *Acinetobacter*, *Achromobacter* and *Alcaligenes denitrificans*, the bacterial species known to degrade PCBs. As the "solid PCB" waste tends to be composed of contaminated objects and especially old electrical components, biological treatment might be difficult due to lack of growth medium.

Recommendations

Models: These models or similar ones should be tested first on a laboratory scale and, if they seem to work, a pilot project should be set up somewhere in the real world. The lab tests will need to answer a number of questions; first, what parameters of size, concentration and residence time are correct when scaled up from the test tube? Next,

will the treated water and soil be sufficiently decontaminated to be reused? What materials are ideal? (For example, if *P. chrysosporium* turns out to degrade plastics, the wheels will need to be ceramic or frosted glass.) Finally, what unknown factors affect the system? *P. chrysosporium* has not been tested for toxic effects from heavy metals; what if it is in fact sensitive to mercury or copper, and trace amounts in the waste stream damage the culture? The fungus successfully breaks down pure compounds in the laboratory, but a more complex waste on a larger scale is sure to present new problems.

In general, further research should attempt to determine what chemicals are toxic to each of the pollutant-degrading organisms studied. In particular, it should be determined why *P. chrysosporium* loses its effectiveness over prolonged exposure to DDT, whether respite from this exposure does in fact allow the culture to resume detoxification, and if it reacts in the same way to other organopollutants.

Other Organisms: The other organisms studied would not be useful for a mix of many unknowns, like the waste from a research lab, but could be strategically combined to detoxify a waste of simpler, known composition. Most cases would probably be handled best by *P. chrysosporium*; however, it could not be used if the waste contains fixed nitrogen. In such a case, waste treatment designers would have to resort to other organisms. There are a few rules limiting the possible configurations of systems. First, fungicides are likely to kill fungi, though this seems not to apply to *P. chrysosporium*. Therefore a metal-removing tank using fungi must follow, not precede, the organopollutant-degrading tank. Second, bacteria and fungi cannot be cultured in the same tank, as the fungi (especially *Penicillium*) are likely to attack the bacteria. For some waste mixtures, biodegradation may simply not be possible.

Some of the compounds I found to be biodegradable, such as lindane, chlordane and 2,4,6-T, have already been banned by EPA, and hence are unlikely to be part of any waste stream in the United States. The organisms that specifically degrade these would, if used in the US, be more appropriate for cleaning up contaminated sites than for treating a waste stream. They could also be used for waste stream treatment in countries where these compounds are still used. However, if a government or company is so conscientious as to detoxify its hazardous waste, it would most likely have sense enough to ban the compound in the first place. It is not improved disposal, but source reduction that will solve hazardous waste problems.

It is realistic to assume that institutions such as UC Berkeley will continue to produce and dispose of these poisons, despite the protests of the environmentally conscious. There already exists a great body of knowledge on organopollutant biodegradation. The university could make good use of it by supporting or recruiting research on applications of this knowledge, and eventually developing and testing detoxification systems for various parts of its waste stream.

References

Ahmed, M. and D.D. Focht, 1973. Degradation of polychlorinated biphenyls by a species of *Achromobacter. Canadian Journal of Microbiology*, v. 17, pp. 47-52.

Apajalaht, J. and Salkinojasalonen, 1986. Degradation of chlorinated phenols by *Rhodococcus chlorophenolicus. Applied Microbiological Biotechnology*, v. 25: 1 pp. 62-67

Alking, H, Govers, H., van't Riet, J., 1985. Detoxification of mercury, cadmium and lead in *Klebsiella aerogenes* NCTC 418 growing in continuous culture. *Applied Environmental Microbiology*, v. 50:5, pp. 1262-67.

Aust, S. D., director, University of Utah Biotechnology Center, Logan, UT. Personal communication, Feb. 4, 1988.

Bedard, D.L., Wagner, R.E., Brennan, M.J., Haberl, M.L., Brown, J.F., 1987. Extensive degradation of aroclors and environmentally transformed polychlorinated biphenyls by *Alcaligenes eutrophus* H580. *Applied Environmental Microbiology*, v. 53:5, pp.1094-1102.

Bluestone, M., 1986. Microbes to the rescue: hazardous waste biotreatment fights for recognition. *Chemicalweek*, v. 139, pp. 34-41.

Bumpus, J.A. and Aust, S.D., 1986. Biodegradation of environmental pollutants by the white-rot fungus *P. chrysosporium:* involvement of the lignin-degrading system. *Bioessays*, v. 6:4, pp. 166-170.

____, 1987. Biodegradation of DDT [1,1,1-trichloro-bis(4-chlorophenyl)ethane] by the white-rot fungus *Phanerochaete chrysosporium. Applied Environmental Microbiology*, v:53: 9, pp. 2001-2008.

Bumpus, J.A., Tien, M., Wright, D.S., Aust, S.D., 1985. Biodegradation of environmental pollutants by the white-rot fungus *Phanerochaete chrysosporium*. In *Proceedings of the 11th Annual Research Symposium on Incineration and Treatment of Hazardous Waste*, Environmental Protection Agency, Cincinnati, OH. 233 pp.

Chakrabarty, Ananda, Professor of bacteriology, University of Illinois, Chicago, IL, Personal communication, Nov. 13, 1987.

Galun, M.E. and Siegel, S.S., 1987. Removal of metal ions from aqueous solution by *Penicillium* biomass: kinetic and uptake parameters. *Water, Air and Soil Pollution*, v. 33:3, pp. 359-372.

Grady, C.P.L., and Lim, H. C., 1980. *Biological Waste Treatment: Theory and Applications.* Marcel Dekker, Inc, New York, NY. 917 pp.

Jamil, P., 1987. Water hyacinth as biological filter for treating contaminants from agricultural wastes and industrial effluents. *Journal of Environmental Science and Health*, v. 22:1, pp. 103-112.

Laughlin, J., 1983. Wet air oxidation for hazardous waste control. *Journal of Hazardous Materials*, v. 8:1 pp.1-10.

Nor, Y.M. and Cheng, H., 1986. Chemical speciation and bio-availability of copper: uptake and accumulation by *Eichornia crassipes. Environmental Toxicology and Chemistry*, v. 5: 11, pp. 9441-48.

Smith, J., & Moore L., 1984. *Biological Detoxification of Hazardous Wastes.* University of Tennessee Press, Knoxville, TN, 62 pp.

Spain, J.D. and Nishino, S.F., 1987. Degradation of 1,4-dichlorobenzene by a *Pseudomonas* sp. *Applied Environmental Microbiological Biotechnology*, v. 53:5, pp. 1010-1019.

Steiert, J., and Crawford, R.I., 1986. Catabolism of pentachlorophenol by a *Flavobacterium* sp. *Biochemical and Biophysical Research Community*, v. 141: 2, pp. 825-830.

_____ 1987. Degradation of chlorinated phenols by a pentachlorophenol-degrading bacterium. *Applied Environmental Microbiology*, v. 53: 5, pp. 907-910.

UC Berkeley Office of Environmental Health and Safety, 1987. Hazardous Wastes by Department (computer file).